Reg. No. [ ] [14ME44]

FOURTH SEMESTER B.Tech EXAMINATION, JUNE - 2018

DESIGN OF MACHINE ELEMENTS - I

Time: 3 Hours **Maximum Marks:70**

Instructions:

1. Answer any **FIVE** full Questions by choosing at least two questions from each part.
2. Missing data may be suitably assumed.
3. Use of machine design data hand book is permitted.

PART – A

1. a. Briefly discuss factors influencing the selection of suitable material for machine element. **04**

b. A point in a structural member subjected to a plane stress as shown in fig. 1b. Determine the following. **10**

i. Normal and tangential stress on a plane inclined at 45^0

ii. Principal stresses and their direction

iii. Maximum shear stress

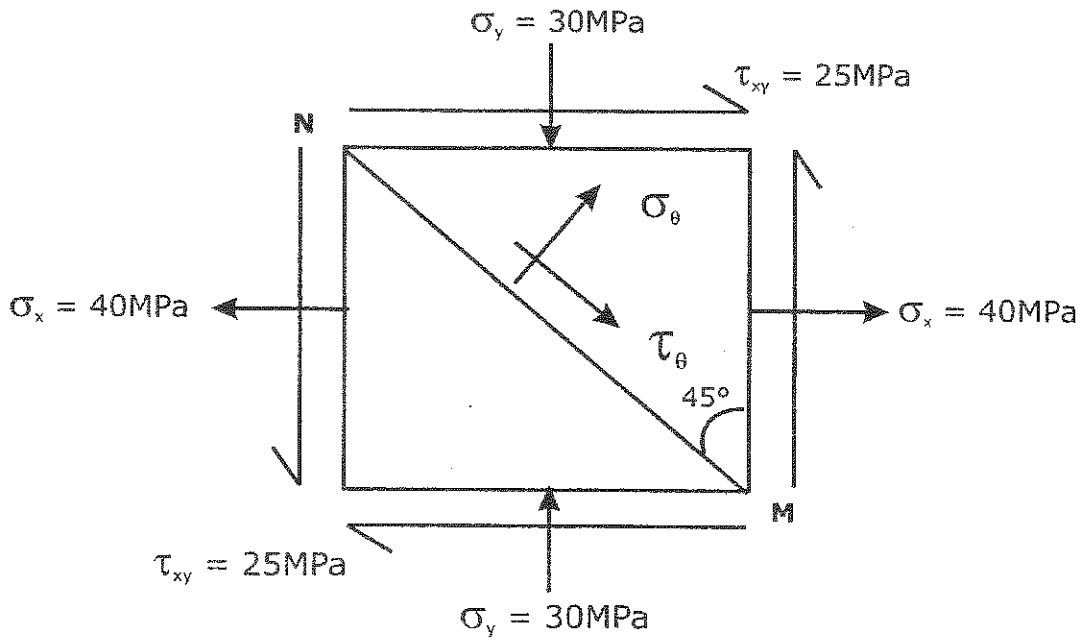

Fig. 1b

2. a. Explain the following theories of failure **06**

i. Maximum principal stress theory

ii. Maximum shear stress theory

iii. Distortion energy theory

b. A plate made of C45 steel having yield strength of 353MPa is subjected to the following stresses, σ_x = 150MPa, σ_y = 100MPa and τ_{xy} = 50 MPa. Find the factor of safety by **08**

i. Maximum Principal stress theory

ii. Maximum shear stress theory

iii. Hencky Mises theory

3. a. A filleted stepped bar of 10mm thick is subjected to a bending moment of 1 KN-m. The maximum stress in the plate is limited to 90MPa. Determine the dimensions of the bar if the ratio of r/d is 0.2 and the ratio of D/d is 2. **06**

b. A weight 20KN falls from a height of 300 mm on to a vertical steel pole of 6m long and 300 mm in diameter. The pole is fixed at the lower end. Take modulus of Elasticity of steel as 206 GPa, Determine **08**

i. Maximum compressive stress in the pole neglecting the inertia effect

ii. Deformation of pole due to impact.

4. a. Derive the Soderberg's equation when the member is subjected to fatigue axial loading. **04**

b. A cantilever beam made of cold drawn carbon steel having (σ_U = 55MPa, σ_y = 470MPa and σ_{-1} = 275MPa) of circular cross-section subjected to load which varies from –F to 3F, as shown in Figure 4b. Determine the maximum load that this member can withstand for an infinite life using a factor of safety 2. **10**

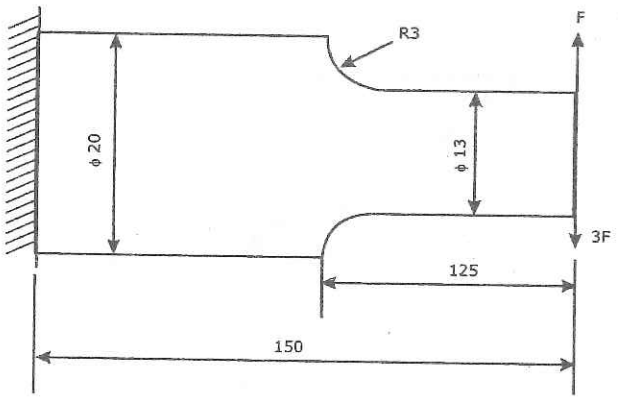

Fig. 4b (Dimensions in mm)

PART - B

5. A shaft is supported by two bearings placed 1m apart. A 500mm diameter pulley is mounted at a distance of 200mm to the right of the left hand bearing and this derives a pulley directly below it, with the help of belt having maximum tension of 3000N. The pulley weighs 1000N. Another pulley 300 mm diameter is placed 300 mm to the left of right hand bearing is driven with the help of electric motor and the belt which is placed horizontally to the right. This pulley weighs 500N. Take μ = 0.24, and angle of contact as 180^0. Determine the diameter of the shaft by selecting C15 steel having allowable shear stress of 53MPa. Take K_b = 1.75 and K_t = 1.25. **14**

6. a. Design a socket and spigot type cotter joint to sustain an axial load of 100KN. The material selected for the joint has the following design stress σ_t = 100MPa, σ_c = 150MPa and τ = 60 MPa respectively. **06**

b. Design a protected type cast iron flange coupling for a steel shaft transmitting 30KW at 200 rpm. The allowable shear stress in the shaft and the key material is 40MPa. The maximum torque transmitted to be 20% greater than full load torque. The allowable shear stress in the bolt and flange is 60MPa and 40MPa respectively. **08**

7. a. A double riveted lap joint has to be made between 9mm plates. If the working stress in tension, crushing and shear are 80MPa, 120MPa, and 60MPa, respectively, design the riveted joint. **08**

b. A plate of 80mm wide and 10mm thick is to be welded to another plate by means of parallel fillet welds. The plate is subjected to a load of 50 KN. Find the length of the weld so that maximum stress does not exceed 50MPa. Consider the joint under static load only. **06**

8. a. Explain self locking and overhauling in power screws. **04**

b. A triple thread power screw used in a screw jack, has a nominal diameter of 50mm and a pitch of 8mm. The threads are square shape and the nut is 48mm. The screw jack is used to lift a load of 7.5 KN. The co-efficient of friction at the threads is 0.12 and the collar friction is negligible calculate **10**

i. Principal shear stress in the screw.

ii. Unit bearing pressure for threads.

iii. State whether screw is self locking.